# Décor splice 400 mm

E-no — MP-no 365V

The décor splice is fitted over the joints to hide gaps and unevenness. They effectively eliminate problems with reflections and provide a rhythmic and harmonic patterns in corridors for example.

## Product details
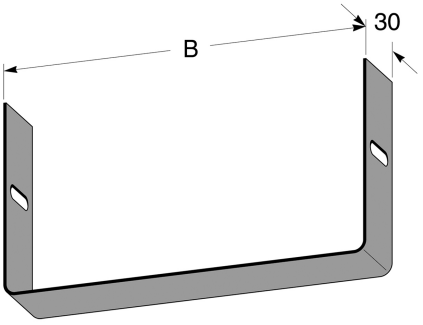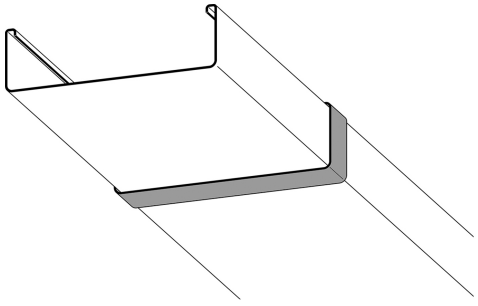
| E-no | MP-no | EAN |
|---|---|---|
| | **365V** | **7394333126661** |
| Dimensions (dxwxh) | Weight kg | Surface |
| **402x32x85** | **0.12** | **White** |
| Environment class | Package pieces | Climate impact (kgCo2e) |
| **C2** | **10** | **0.31** |